SLW-Tri Series

Sanitary Hygienic Liquid Turbine Flow Meter

Overview

SLW series Turbine Flow has its simple structure, light weight, high-accuracy, perfect repeatability, sensitivity, easy maintenance and use. It is widely used to measure liquid which has no chemical corrosive reaction with stainless steel 1Cr18Ni8Ti,2Cr13,corundum Al2O3and cemented carbide. This kind of measured liquid has no impurities such as fiber and particles. The movement viscosity is lower than $5\times10^{-6}m^2/s$ at working temperature. If the viscosity is higher than $5\times10^{-6}m^2/s$, the flow meter should be calibrated in the liquid before use. It can finish batch control, alarm and etc,if matched with special digital controllers. It is also the ideal meter for flow measuring and energy saves. Hygienic Turbine Flow meters provide a durable and cost efficient ways to measure the liquid fluids in excellent precise and stable repeatability. This sanitary TUF is designed for the dairy, beverage, food processing and pharmaceutical industries. Such as for clean water, milk, palm oil, edible oil, vegetable oil, fish oil flow measurement and so on. The design of this type flowmeter is also suitable for cleaning-in-place (CIP).

Features

- High accuracy; Normal type can reach ±1%R, ±0.5%R.High accuracy type can reach to ±0.25%R.
- Excellent repeatability, repeatability in a short time can reach to 0.05%~0.2%.Due to the excellent repeatability; customers can use it for trade purpose.
- Output pulse frequency signal, suitable for total flow measuring and connecting computer, no zero drift and strong ability in anti-noise.
- High frequency signal (10Hz~1.5 KHz), strong signal resolution.
- Wide turn down ratio, max 1:20
- Compact and light structure, convenience in installation and maintenance

Technical Specification

Table1

Manufacture Standard	Turbine flow meter (JB/T9246-1999)
Medium	Clean, low viscosity($\leqslant 5\times10^{-6}m^2/s$) ,non-corrosive liquid

Process Connection	Tri clamp	
Size:	4mm to 100 mm ((¼to 4")	
Accuracy	0.5%,1.0%	
Turn Down Ratio	1:10-1:20	
Calibration	Methods	Master meter calibration
		Static weigh mass flow calibration
	Environment	Environment temperature: 20℃
		Relative Humidity :65%
Working Condition	Medium temperature	T1: -20 ~80℃
		T2: -20 ~120℃
		T3: -20 ~150℃
	Environment temperature	-20 ~60℃
	Relative Humidity	5%-90%
	Atmospheric pressure	86Kpa-106Kpa
Enclosure Protection	SLW-N:IP60; others IP65	
Transmission Distance	No more than 1000 m	
Material	Housing: Standard-304 Stainless Steel ; Optional - 316 Stainless Steel Rotor:2Cr13 Stainless Steel, option duplex steel 2205	
Consumption	< 1W	
Communication	Modbus RTU/Hart Protocol	

Flow Range & Connection & Pressure Rating

Table2

Size (mm)	Standard Flow (m3/h)	Extended Flow (m3/h)
DN4	0.04-0.25	0.04-0.24
DN6	0.1-0.6	0.06-0.6
DN10	0.2-1.2	0.15-1.5
DN15	0.6-6	0.4-8
DN20	0.8-8	0.45-9
DN25	1-10	0.5-10
DN32	1.5-15	0.8-15
DN40	2-20	1-20
DN50	4-40	2-40
DN65	7-70	4-70
DN80	10-100	5-100
DN100	20-200	10-200

Pressure Rating: 1.0 Mpa

Product Classification

SLW-N			Table 3
	No display, output pulse to upper computer, PLC, DCS., etc., Low cost and compact size, Enclosure Protection :IP60		
	Power supply		DC 24V
	Consumption		< 0.5W
	Input signal Frequency		0~3000Hz
	Pulse output	Pulse load	>1000 Ω
		High level	>22V
		Low level	<0.8V
		Pulse width	$1/2f_{in}$×1000(ms) *1
	Insulation resistance*2		>500M Ω

*1: f_{in} is electrical pulse signal frequency which is inducted by coils from rotor.

*2: Insulation resistance is the insulation between test terminal and housing

SLW-A			Table 4
	No display, output 4-20mA to upper computer, PLC, DCS., etc., Low cost and compact size, Enclosure Protection :IP65		
	Power supply		DC 24V
	Consumption		< 0.5W
	Input signal Frequency		0~3000Hz
	4-20mA output	Current load	< 600 Ω
		Output	2 wire 4-20mA
	Insulation resistance*2		>500M Ω

*1: f_{in} is electrical pulse signal frequency which is inducted by coils from rotor.

*2: Insulation resistance is the insulation between test terminal and housing

SLW-B			Table 5
	With display, output 4-20mA to upper computer, PLC, DCS., etc., Muti-points correction function ,direct reading, not affected by outside power supply, thunder proof; □ 10 years data recorded after power off; Low cost and compact size, Enclosure Protection :IP65;		
	Power supply		DC 3 V Battery powered
	Min working voltage		>2V
	Consumption	Working current	290±5uA
		Saving current	320±5uA *1
	Battery Nominal Capacity		12Ah
	Battery life time		56 months *2
	Input signal Frequency		0~3000Hz
	Insulation resistance		>500M Ω

*1 Saving current is the instant current peak value to save every 10 seconds when the transmitter in working status.

*2 Battery life time and working current is calculated value, Specific situations is different result.

SLW-C,C1,C2,C3			**Table 6**
	With display, output 4-20mA or pulse to upper computer, PLC, DCS., etc.,Modbus or Hart Protocol options		
	Power supply		DC24V
	Consumption		< 0.5W
	Input signal Frequency		0~3000Hz
	Pulse output (Option)	Pulse load	>1000 Ω
		High level	>22V
		Low level	<0.8V
		Pulse width	$1/2f_{in}$×1000(ms) *1
	4-20mA output (Option)	Current load	< 700 Ω
		Output	4-20mA
	Battery Nominal Capacity		12Ah
	Insulation resistance*2		>500MΩ
	Communication		RS485/Hart

*1: f_{in} is electrical pulse signal frequency which is inducted by coils from rotor.

*2: Insulation resistance is the insulation between test terminal and housing

Model Selection

Table 7

Item	**Code**	**Description**
General	SLW	Silver Liquid turbine flow meter
Nominal Diameter	DN4-100	DN4-DN100
Type	N	Without display, pulse output, 24VDC power supply
	A	Without display ,4-20mA output, 24VDC power supply
	B	With display, Battery powered, without output
	C	With display,4-20mA output, 24VDC power supply
	C3	With display, Pulse output, 24VDC power supply
	C2	With display,4-20mA output and Hart, 24VDC power supply
	C1	With display,4-20mA output and RS485, 24VDC power supply
	Cx	Customized
Accuracy	10	±1.0% of reading (DN4-DN10)
	05	±0.5% of reading (In line type,DN15-DN100)
	S	Customized
Flow Range	S	Standard (refer to table 2)
	E	Extended (refer to table 2)
Housing Material	S	304 Stainless Steel
	L	316 Stainless Steel
Explosion Proof	N	Non explosion proof
	E	ExdIIBT6
Pressure rating	N	Standard, (refer to table2)
	H(x)	Customized,(refer to table2)
Temperature	T1	-20 ~80℃

	T2	-20 ~120℃
	T3	-20 ~150℃
Process connection	Tri	Tri-clamp connection
Addition option	H	With Hausman Connector

Sample: SLW-25/C/05/S/S/N/T1/Tri

Hygienic Liquid turbine flow meter, DN25, With display,4-20mA output, 24VDC power supply, accuracy 0.5%,standard flow range 1-10m3/h, 304 Stainless Steel Housing Material, non explosion proof,4.0Mpa,temperature:-20 ~80℃,tri-clamp connection

Dimension

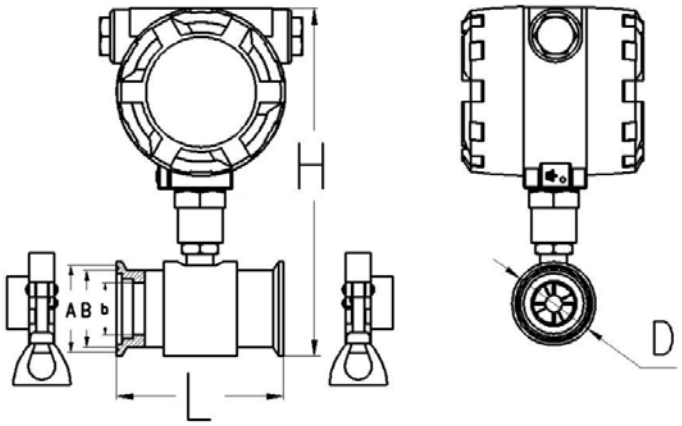

SIZE (mm)	L(mm)	D(mm)	A(mm)	B(mm)	b(mm)	H(mm)			
						N Type	N Type With Exd	A Type	B&C Type
4	50	50.5	46	40.5	4	145	150	150	210
6					6	145	150	150	210
10					10	145	150	150	210
15	100				15	155	160	160	225
20					20	160	160	160	225
25					25	160	165	165	230
32	120				32	165	165	165	230
40	140	64	59	53.5	40	175	180	180	245
50	150	78	73.5	68	50	185	190	190	255
65	170	91	86	80.5	65	205	205	205	270
80	200	106	100.5	94	80	215	220	220	285
100	220	119	113	106	100	235	240	240	305